## Celling Mount

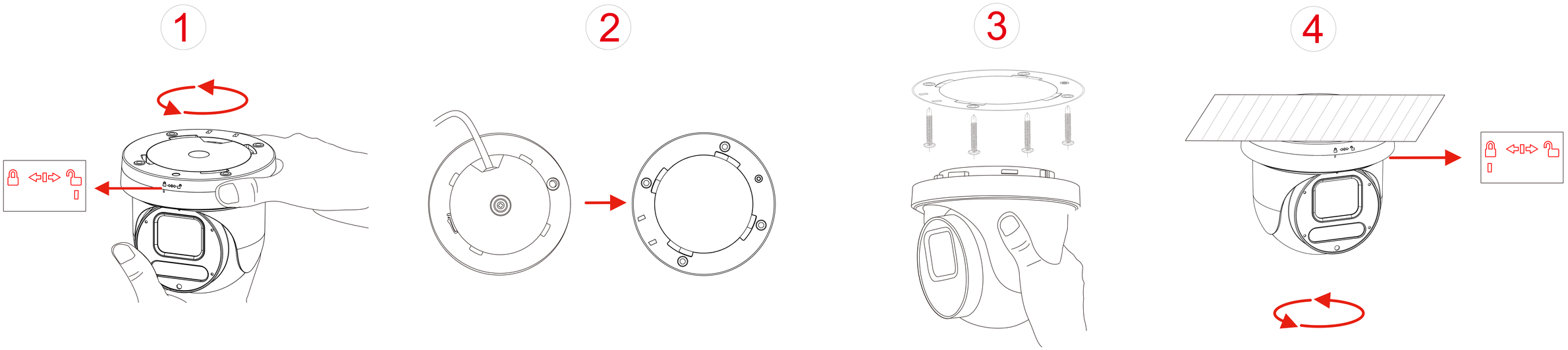


1. Remove the base ring

2. Install the plastic ring to celling by 4 screws

3. Install the camera back to base ring

4. Make sure the lock tag locked

## Wall Mount

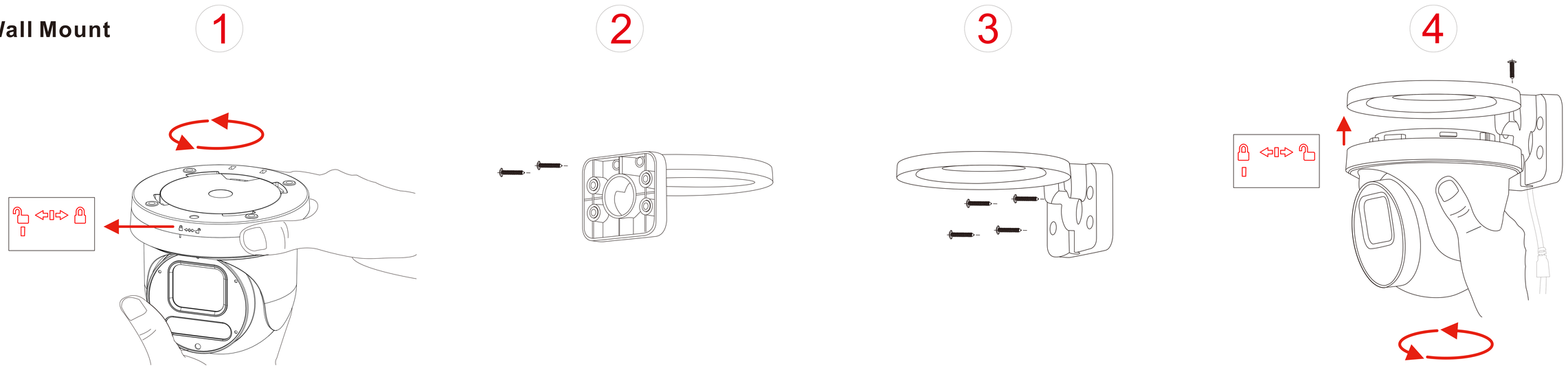


1. Remove the base ring

2. Splice the plastic ring with the small wall-mount bracket by 2 screws

3. Install the spliced bracket to wall by 4 screws

4. Install the camera back to base ring